Kinetrol VLS Limit Switch Box



Offers a wide range of signalling options in a fully enclosed, corrosion resistant metal case. Available for direct mounting onto Kinetrol rotary actuators or discrete mounting via an industry standard VDI/VDE interface onto any make of rotary actuator. Easy to wire and set up with industrial standard robustness. Internally fitted options include AS Interface digital communication and a 4-20mA, 2-wire modulating angle retransmit circuit.

The range of switch and terminal arrangements includes 2 or 4 switches, extra connections allowing single point termination of wiring for limit switches and solenoid valves.
ATEX approved Ex d (Category 2) explosion proof and Ex ia intrinsically safe packages (Category 1). Integral sealed Clear Cone Monitor and red/green LED indicator options also give high visibility external visual indication of position.

Specification

Casing
Precision diecast aluminium alloy

Finish
Epoxy thermoset powder

Seals
Nitrile rubber ‘O’ ring seals

Cable entry options
2 or 4 entries

M20 x 1.5 Conduit thread
or
½ NPS Conduit thread

4 Way plug DIN 43650A
(fits either conduit thread)

4 Way M12 Connector
(M20 Conduit thread only)

ATEX Up to Category 1

Options

- Discrete VDI/VDE (NAMUR) interface option for use with any industry standard rotary actuators
- Units sealed to IP67/NEMA 6 (ATEX units IP66/NEMA 4X, IP67 option available)
- Robust corrosion resistant epoxy painted diecast box
- Easy and accurate setting of switch position
- Available for direct mounting to Kinetrol models 03 to 15 (for minimum height)
  Discrete Kinetrol 05 square drive insert for use with Kinetrol actuator models 16 to 60
- Quick access - No special tools required
- Two or four cable entries as standard to allow back wiring of solenoid valves
- Multiple switch options available for general and hazardous areas
- AS Interface bus circuit option inside box reads up to 4 switch inputs, drives up to 2 solenoids powered by bus only (see Kinetrol ASi Interface Bus Communication data sheet for more information)
- DeviceNet option inside box with various network speeds allows 2 on / off inputs and drives up to 2 solenoids (see Kinetrol DeviceNet Communications data sheet for more information)
- Optional Clear Cone monitor available
- Integral LED indicator lamps and angle retransmit circuit options are available

Kinetrol VLS Limit Switch Box

LOAD RATINGS FOR STANDARD MICROSWITCHES (type 004)

Voltage	Resistive Load
125 V AC	15A
250 V AC	15A
up to 12 V DC	15A
up to 24 V DC	10A
up to 48 V DC	3A
up to 250 V DC	0.25A

MULTIPLICATION FACTORS FOR NON-RESISTIVE LOADS

Steady state tungsten lamp load - x 0.1
Steady state inductive load - x 0.2
Peak inductive load - x 1.0

Switch Options

Switch Type 001
2 intrinsically safe 2 wire inductive proximity sensors for hazardous areas (ATEX CAT 1), normally closed.
Ambient temperature range -20°C to +80°C (-4°F to +176°F)
ATEX Monitor must be fitted

Switch Type 002
2 pneumatic switches with 4mm (5.32") push in fittings (ATEX CAT 2), normally closed.
Ambient temperature range -15°C to +60°C (+5°F to +140°F)

Switch Type 003
Certificated unit to (ATEX CAT 2) Ex d e IIC T6 for hazardous area Zone 1. 2 x 3 wire switches for SPDT.
Ambient temperature range -20°C to +70°C (-4°F to +158°F)
ATEX Monitor must be fitted

Switch Type 004
2 x 3 wire microswitches for SPDT.
Ambient temperature range -40°C to +80°C (-40°F to +176°F)

Switch Type 005
2 x 2 wire proximity sensors 20-250 volts AC, 10-300 volts DC, normally open.
Ambient temperature range -25°C to +70°C (-13°F to +158°F)

Switch Type 006
2 x 2 wire proximity sensors 5-60 volts DC, normally open, with LED switch status indicators.
Ambient temperature range -20°C to +80°C (-4°F to +176°F)

Switch Type 007
4 x 3 wire microswitches for SPDT.
Ambient temperature range -40°C to +80°C (-40°F to +176°F)

Switch Type 008
2 x 2 wire inductive slotted proximity sensors, normally closed.
Ambient temperature range -20°C to +80°C (-4°F to +176°F)

Switch Type 009
2 x 3 wire gold plated contacts intrinsically safe microswitches for SPDT (ATEX CAT 1).
Ambient temperature range -20°C to +80°C (-4°F to +176°F)
ATEX Monitor must be fitted

For ATEX ratings please refer to TD139

Weight

VLS	–	0.68 kg / 1.50 lb

Temperature Range

Standard -20°C to +80°C (-4°F to +176°F)
High Temp Seals up to 100°C (212°F)
Also see switch temperatures

High Temperature Option

2 x V3 or 4 x V3 microswitch high temperature option suitable for 250°C / 482°F for a maximum of 2 hours exposure.
Available with both Kinetrol 07 drive or as Namur discrete.
Contact Kinetrol for special order codes and prices.

Switch Type 00A
4 intrinsically safe 2 wire inductive proximity sensors for hazardous areas (ATEX CAT 1), normally closed.
Ambient temperature range -20°C to +80°C (-4°F to +176°F)
ATEX Monitor must be fitted

Switch Type 00D
4 x 3 wire gold plated contacts intrinsically safe microswitches for SPDT (ATEX CAT 1).
Ambient temperature range -20°C to +80°C (-4°F to +176°F)
ATEX Monitor must be fitted

Switch Type 00E
2 x 2 wire proximity sensors 20-140 volts AC / 10-140 volts DC.
Ambient temperature range -25°C to +80°C (-13°F to +176°F)

Switch Type 00G
Certificated unit (ATEX CAT 2) Ex d e IIC T6 for hazardous area Zone 1, 4 x 3 wire switches for SPDT.
Ambient temperature range -20°C to +70°C (-4°F to +158°F)
ATEX Monitor must be fitted

Switch Type 00M
4 x 3 wire inductive proximity sensors 10-30 volts DC, normally open.
Ambient temperature range -25°C to +70°C (-13°F to +158°F)

Switch Type 00N
2 x 3 wire inductive proximity sensors 10-30 volts DC, normally open.
Ambient temperature range -25°C to +80°C (-13°F to +176°F)

Electronics Option B - E *
AS interface options are available with both the two and four entry Kinetrol VLS Limit Switch Box. Options B to E allow for different extended addressing options.

Electronics Option P *
Two or four way VLS Limit Switch Box fitted with potentiometer (20K ohms conductive plastic type).

Electronics Option R *
Two or four entry VLS Limit Switch Box fitted with angle retransmit, loop powered two wire circuit passes 4-20mA current, proportional to 0-90° position of actuator.

Electronics Option U (standard) *
Two or four entry VLS Limit Switch Box without AS interface card, angle retransmit or potentiometer.

* For more details on Electronics options see Kinetrol Asi Interface Bus Communication data sheet

Kinetrol VLS Limit Switch Box

VLS MODULAR BUILD ARRANGEMENT

NOTE: MODELS 05 TO 15 STANDARD ACTUATORS ARE FITTED WITH REMOVABLE PLUG SCREWS IN POSITIONER PORTS ALLOWING RETROFITTING OF 05/07 SIZE POSITIONERS

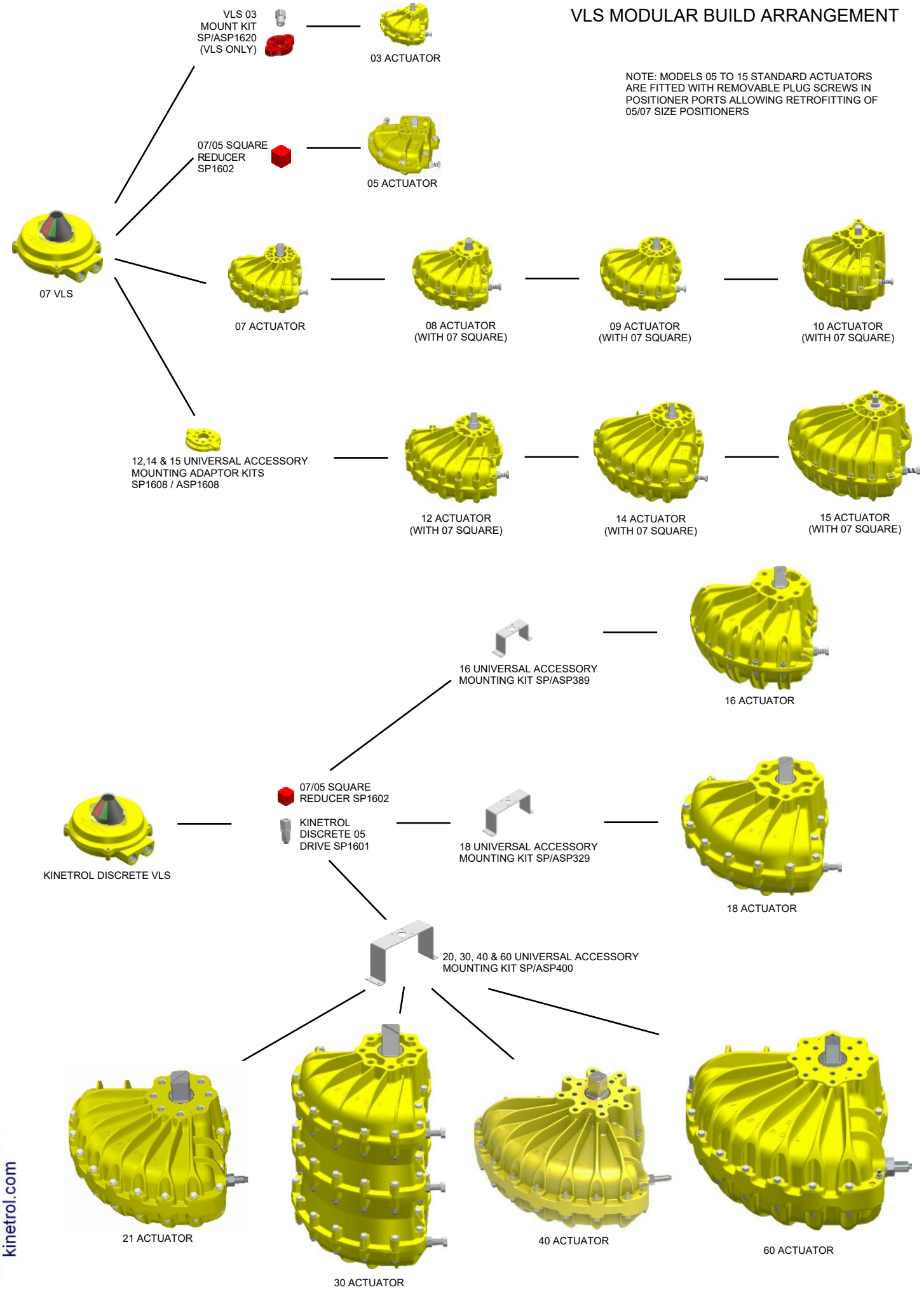

Kinetrol VLS Limit Switch Box

Ordering Codes

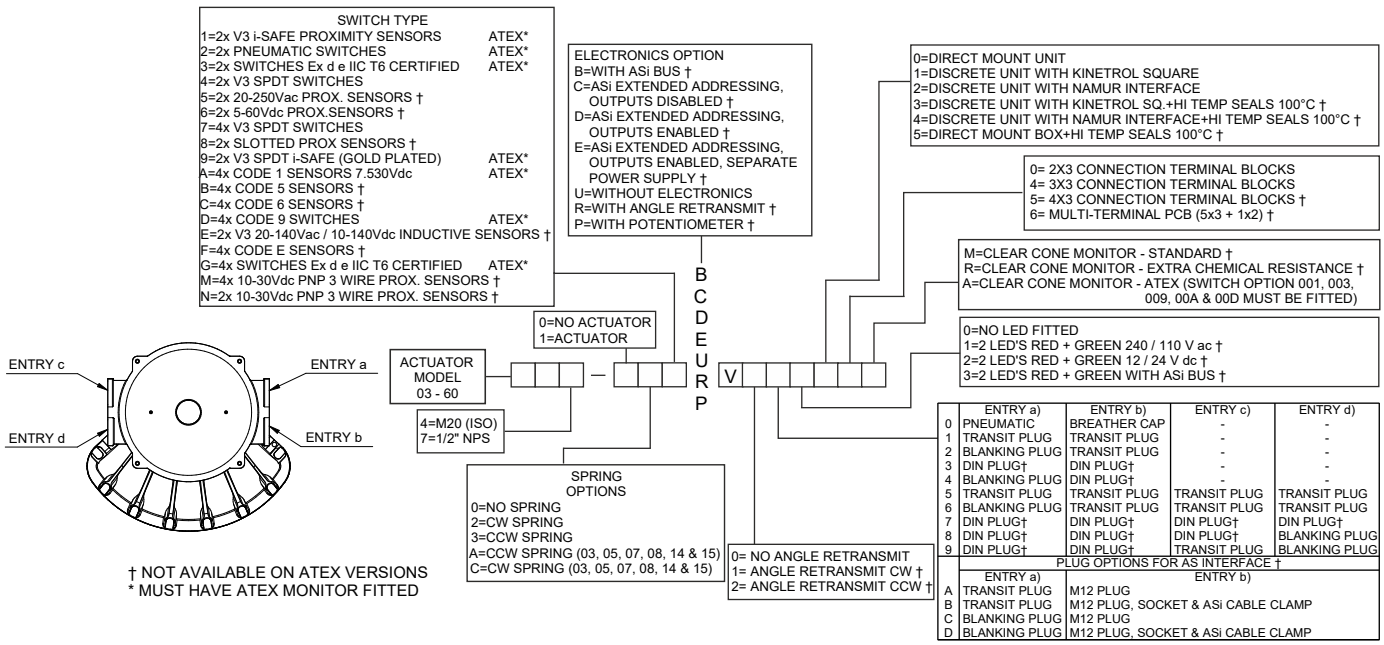

	ENTRY a)	ENTRY b)	ENTRY c)	ENTRY d)
0	PNEUMATIC	BREATHER CAP	-	-
1	TRANSIT PLUG	TRANSIT PLUG	-	-
2	BLANKING PLUG	TRANSIT PLUG	-	-
3	DIN PLUG†	DIN PLUG†	-	-
4	BLANKING PLUG	DIN PLUG†	-	-
5	TRANSIT PLUG	TRANSIT PLUG	TRANSIT PLUG	TRANSIT PLUG
6	BLANKING PLUG	TRANSIT PLUG	TRANSIT PLUG	TRANSIT PLUG
7	DIN PLUG†	DIN PLUG†	DIN PLUG†	DIN PLUG†
8	DIN PLUG†	DIN PLUG†	DIN PLUG†	BLANKING PLUG
9	DIN PLUG†	DIN PLUG†	TRANSIT PLUG	BLANKING PLUG

PLUG OPTIONS FOR AS INTERFACE †

	ENTRY a)	ENTRY b)
A	TRANSIT PLUG	M12 PLUG
B	TRANSIT PLUG	M12 PLUG, SOCKET & ASi CABLE CLAMP
C	BLANKING PLUG	M12 PLUG
D	BLANKING PLUG	M12 PLUG, SOCKET & ASi CABLE CLAMP

EXAMPLES:
074-001UV01000A = 07 VLS BOX WITH 2 X V3 ISAFE PROXIMITY SENSORS, 2 TRANSIT PLUGS, 2 X 3 WAY TERMINALS, ATEX CLEAR CONE MONITOR, ATEX APPROVED
074-004UV01000 = 07 VLS BOX WITH 2 X V3 SPDT SWITCHES, 2 TRANSIT PLUGS, 2 X 3 WAY TERMINALS
074-004RV12000 = 07 VLS BOX WITH 2 X V3 SPDT SWITCHES, ANGLE RETRANSMIT CLOCKWISE,1 X TRANSIT & 1 BLANKING PLUG, 2 X 3 WAY TERMINALS
094-124BV02000 = 09 SPRING RETURN CLOCKWISE ACTUATOR & VLS BOX WITH 2 X V3 SPDT SWITCHES,STANDARD ASi, 2 TRANSIT PLUGS, 2 X 3 WAY TERMINALS
094-109UV01000A = 09 DOUBLE ACTING ACTUATOR, VLS BOX WITH 2 X V3 ISAFE MECH. SWITCHES GOLD PLATED, 2 TRANSIT PLUGS, 2 X 3 WAY TERMINALS, ATEX CLEAR CONE MONITOR, ATEX APPROVED

Further switch options are available upon request -contact Kinetrol for details.

For high temperature option suitable for 250°C / 482°F for a maximum of 2 hours exposure - Contact Kinetrol for special order codes.

Dimensions

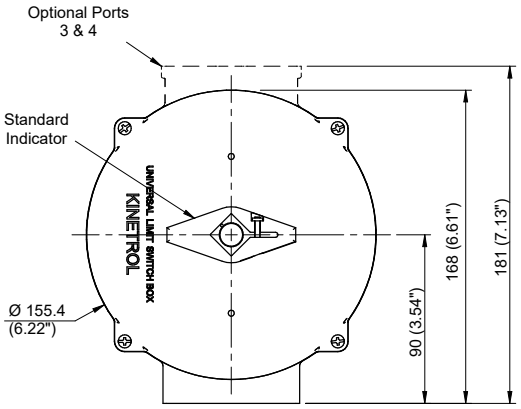

Standard Orientation Of Unit
Box Weight: 0.68 kg / 1.5 lb

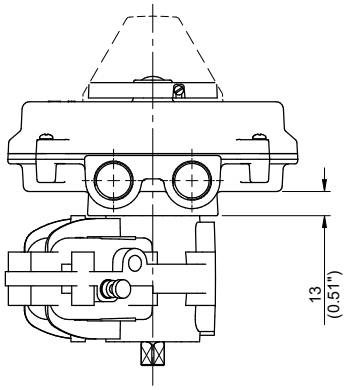

03 & 05
DIRECT MOUNT OPTION
ADDITIONAL ADAPTOR WEIGHT: 0.04 kg / 0.09 lb

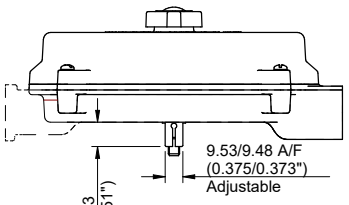

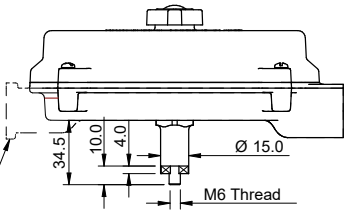

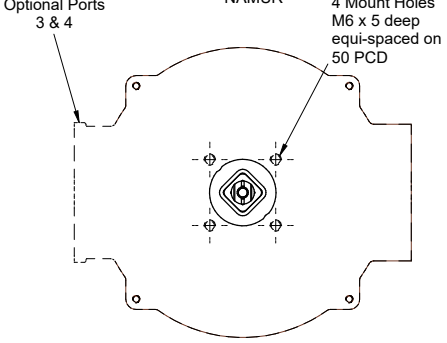

Kinetrol & Namur Discrete Mount Option

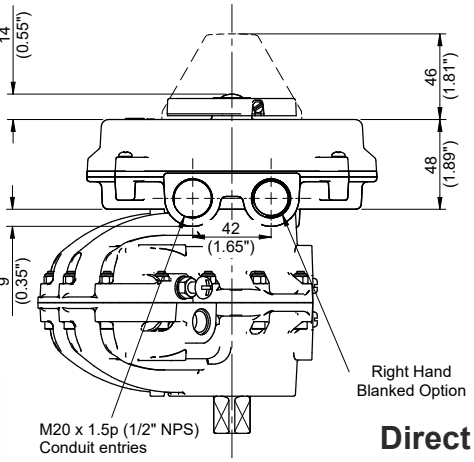

Direct Mount Option

07, 08, 09, 10
DIRECT MOUNT OPTION

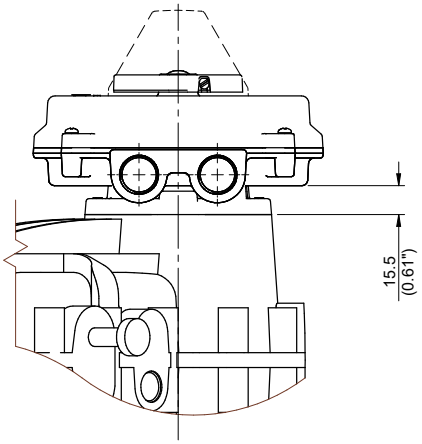

12, 14 & 15
DIRECT MOUNT OPTION
ADDITION ADAPTOR WEIGHT: 0.56 kg